DIMENSIONS:

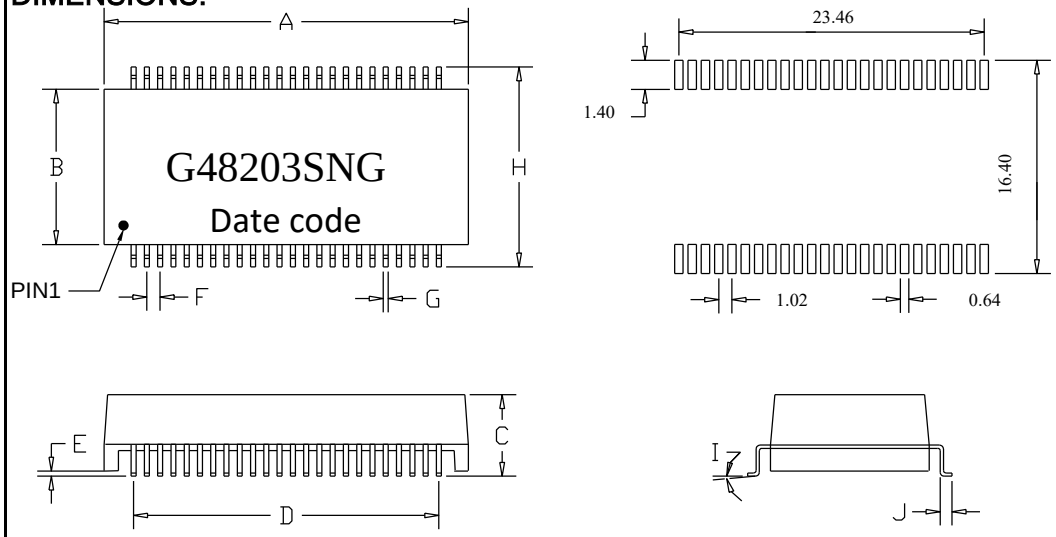

	MILLIMETERS		INCHES	
DIM	Center	Tolerances	Center	Tolerances
A	27.80	± 0.300	1.094	± 0.012
B	12.20	± 0.254	0.480	± 0.010
C	7.50 (max)		0.295 (max)	
D	23.46	± 0.127	0.924	± 0.005
E	0.30	± 0.127	0.012	± 0.005
F	1.02	± 0.127	0.040	± 0.005
G	0.38	± 0.127	0.015	± 0.005
H	15.20	± 0.300	0.598	± 0.012
I	0-8°	0-8°	0-8°	0-8°
J	0.80	± 0.254	0.031	± 0.010

SCHEMATIC:

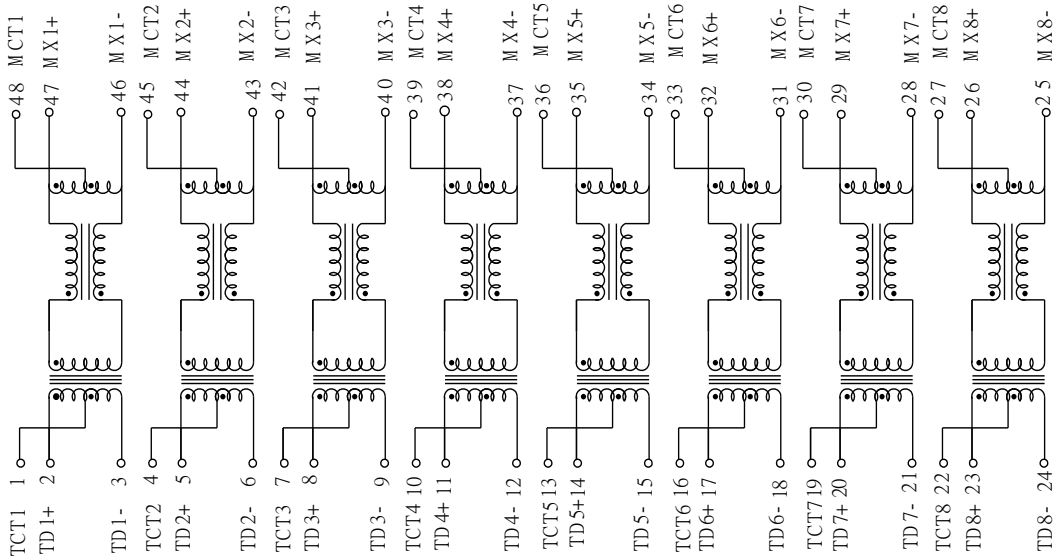

A. *ELECTRICAL SPECIFICATIONS @25 ℃*

OCL:350uH Min @ 100KHz,0.2V,8mA DC BIAS

LL:0.5uH Max @100KHz,0.2V

Cw/w:25PF Typ @100KHz,0.2V

DCR:1.4 Ω Max

Turn Ratio:1CT:1±2%

Polarity:2-47,5-44,8-41,11-38,14-35,17-32,20-29,23-26 In-Phase

Insertion Loss : 0.3-100MHz -1.0dB Max

Return Loss : 1-30MHz -16dB Min

40MHz -16dB Min

50MHz -14.1dB Min

60MHz -12.5dB Min

80MHz -10dB Min

Cross Talk: 30MHz -35.8dB Min

60MHz -30.8dB Min

100MHz -28.0dB Min

Differential to Common Mode Rejection: 30MHz -45dB Typ

60MHz -40dB Typ

100MHz -35dB Typ

Isolation Hi-Pot:1500Vrms 60S

OPERATING TEMPERATURE: 0 ℃ TO 70 ℃.

Storage Temperature Range: -40 ℃ TO +85 ℃

Product Type: ***Green Product***

TITLE	10/100/1000 BASE-T SINGLE PORT TRANSFORMER MODULE							UNIT MM
歐貝斯 OBEST INT,L LTD	Customer Specification NO.		X1					DWG. NO. /
	Part NO.	G48203SNG	NO.	DESCRIPTION	DATE	NO.	DESCRIPTION	DATE
			REVISIONS					SHEET 1 OF 1